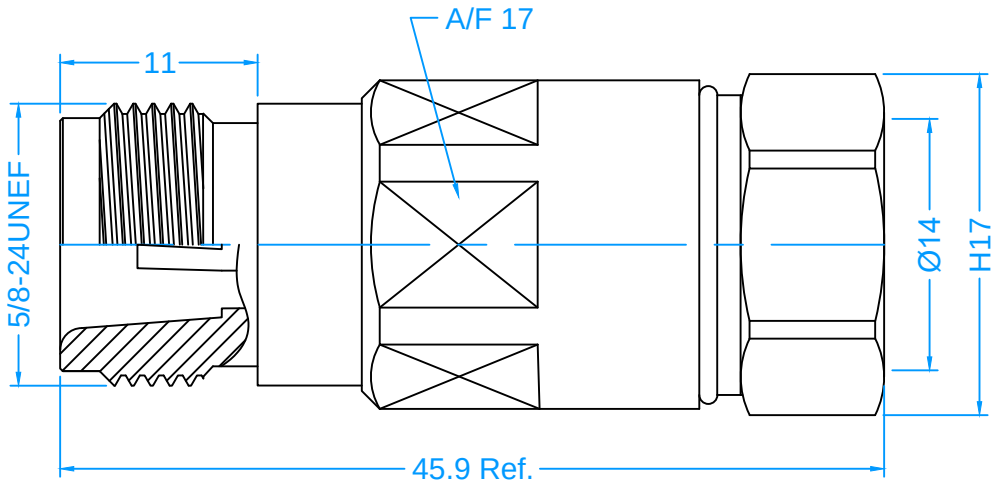

Meets MIL-C-39012, CECC 22210, IEC60169-16. Precision Machined and High Quality Grade Material

TECHNICAL CHARACTERISTICS

Impedance	50Ω	Frequency Range	DC-6GHz
Working Voltage	1000V r.m.s	Withstanding Voltage	2500V r.m.s
Center Contact Resistance	≤1mΩ	Outer Contact Resistance	≤1mΩ
Insulation Resistance	≥5000MΩ	VSWR	≤1.2
Durability	≥500 cycles	Temperature Range	-55°C to 155°C

No.	Description	QTY	Material	Finish
7	Nut	1	Brass	Nickel
6	Clamp	1	Brass	Tri-Metal
5	Washer	2	Brass	Tri-Metal
4	Gasket	3	Silicone	
3	Contact	1	Brass	Silver
2	Insulator	2	PTFE	
1	Body	1	Brass	Tri-Metal

RoHS Compliant

THIRD ANGLE PROJECTION

* MAJOR DIMENSION
UNLESS OTHERWISE NOTED TOLERANCES

SCALE 1:1 UNIT MM

APPROVED TERRY
CHECKED JOHN
DRAWN HENRY
DRAWN DATE 02 Mar. 2011

KeMy Electronic Technology Inc.

TITLE
N (F) Jack, Clamp, for 1/2" Super Flexible Cable

DRAWING NO. KM-010612-1-2S
REV 0

All rights reserved. www.dgkemy.com